Rev. 00

DRG. No. CC3636

ALL DIMENSIONS IN MILLIMETRES
UNLESS STATED OTHERWISE
IF IN DOUBT ASK

DO NOT SCALE

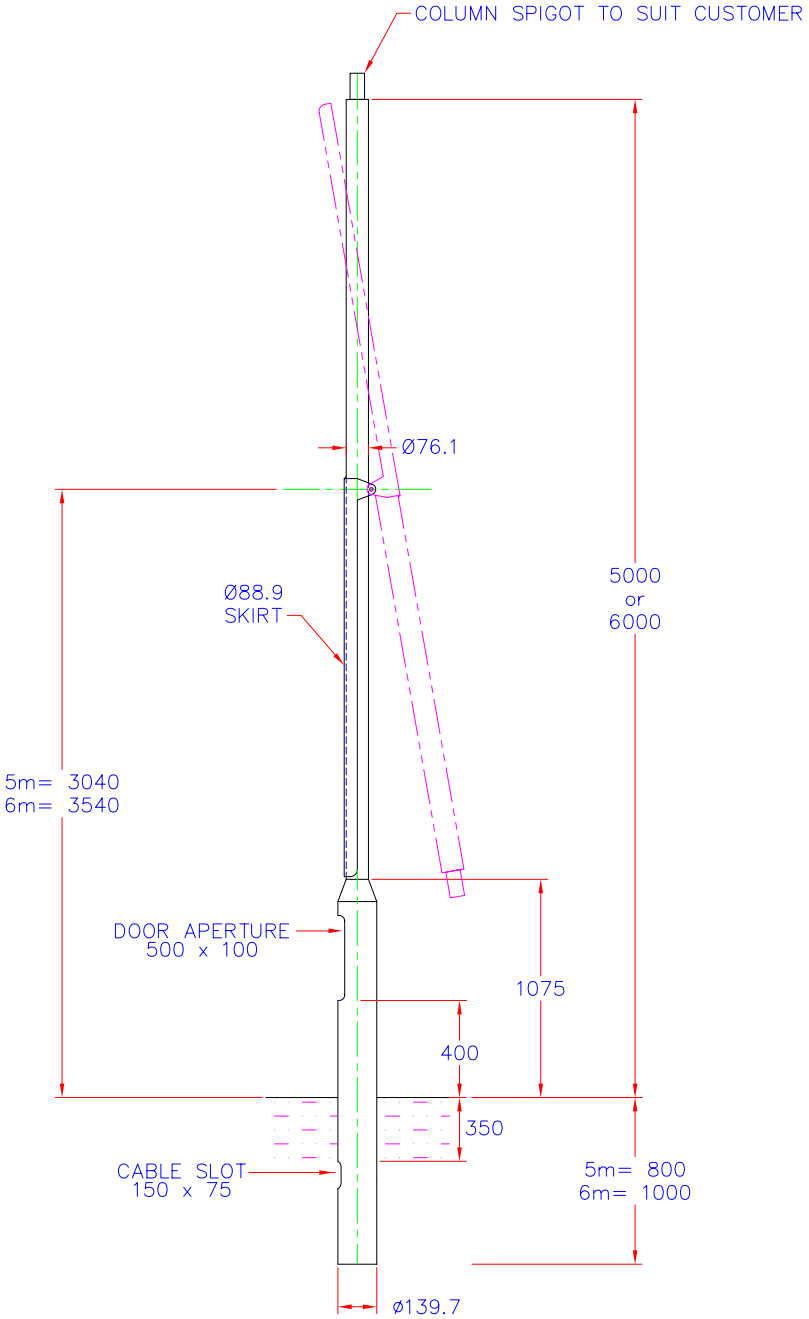

FLANGE PLATE OPTION

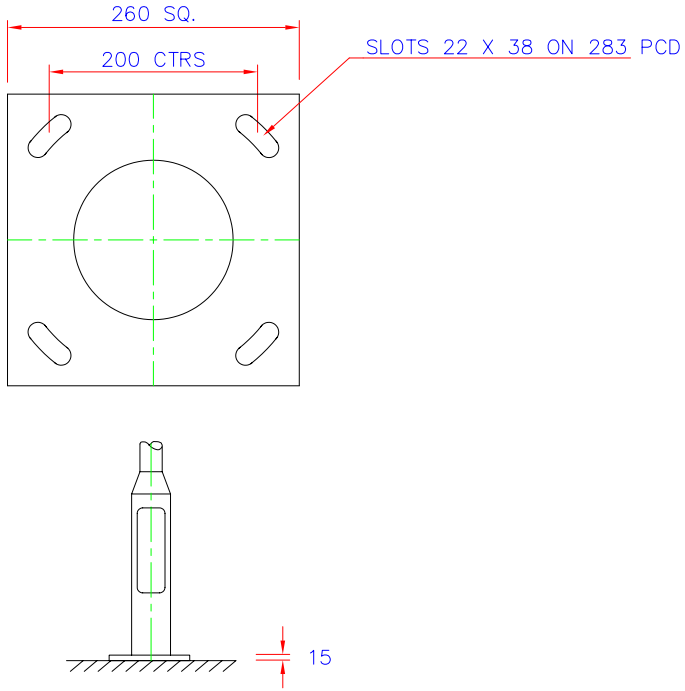

REV.	DESCRIPTION	BY	CHK'	DATE

MATERIAL: S355JOH | FINISH: GALVANISED TO BS EN 1461 | WEIGHT: --

TITLE: 5 & 6m POST TOP HINGING POLE – STD

SCALE: NTS

Sht. 1 of 1

DRAWN: BS308. TOL: BS5649

	NAME	DATE
DRAWN	G.N	28/2/02
CHK'D/ APP'D		

COPYRIGHT
THIS DRAWING IS THE PROPERTY OF STAINTON METAL COMPANY LIMITED & MUST NOT BE USED OR REPRODUCED WITHOUT STAINTON'S WRITTEN CONSENT
COPYRIGHT © DESIGN RIGHT DR 1991

STAINTON
metal company limited
TS17 9LT
TEL No.: 01642 766242
FAX No.: 01642 765509

DRG. No. CC3636 Rev. 00